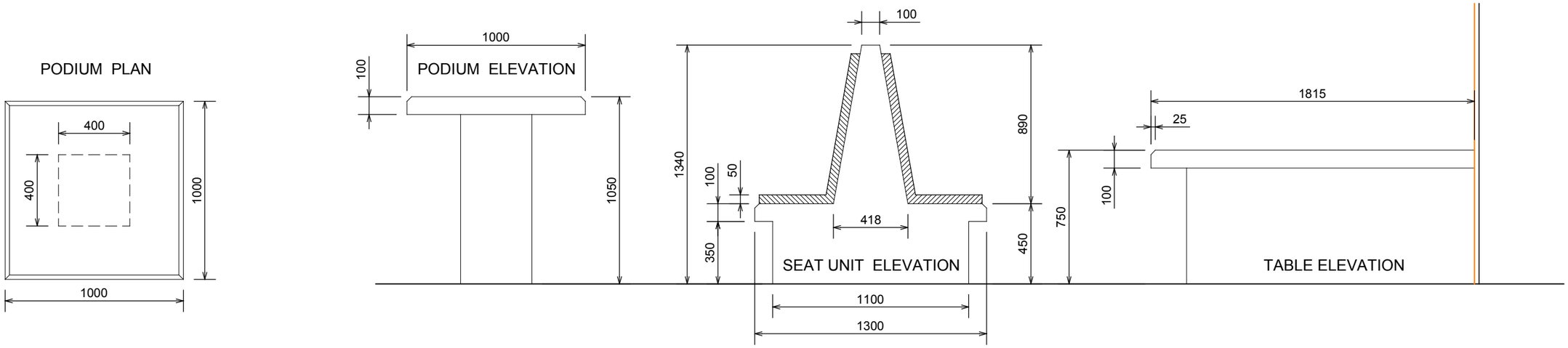


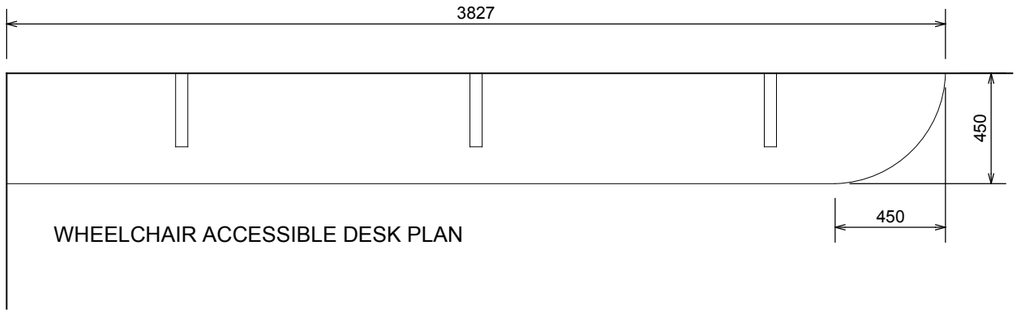


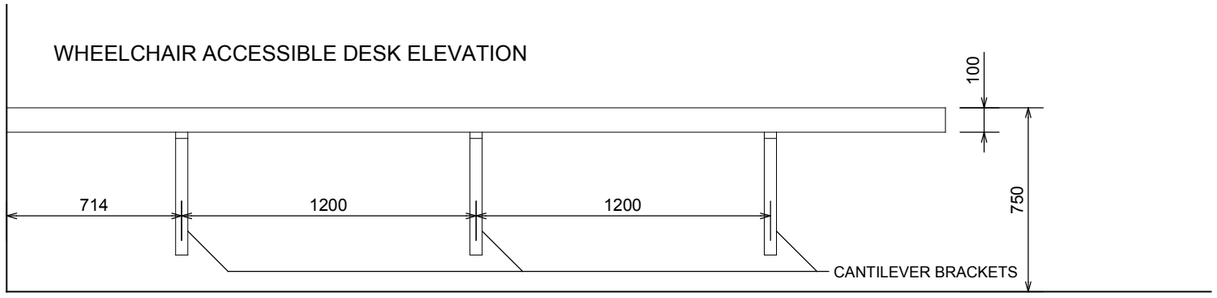

Truline

| | | | | | |
|---|---|---|---|---|---|
| Client: **St Helens Chamber Ltd** | Drawn by: **SO** | Date: **01/18** | Checked: **DB** | Date: **01/18** | Scale @ A3: **1:25** |
| Job title: **Starting Point Refurbishment** | Job no: P2497 | CPI cat: (SO) | Dwg no: 106 | Revision: - | |
| Drawing title: **Proposed Furniture** | | | | | |

| Rev | Date | Revision Note | By | Check |
|---|---|---|---|---|
| - | - | - | - | - |